The Challenge Machinery Company provides owner's manuals on its products solely as a courtesy to its customers. See the information below before using this manual.

These manuals are for reference only. These manuals include products which are noncurrent, unsupported or no longer produced by The Challenge Machinery Company, and are provided solely as an accommodation to our customers. By providing these manuals, The Challenge Machinery Company makes no representation or warranty as to the products, their current condition, or their suitability or fitness for use in any particular application, which are the sole and independent responsibility of the product owner and user.

Older products may not comply with current safety procedures, guidelines or regulations, and it is the product owner's and user's responsibility to evaluate the suitability and fitness of the products in their current use and application. The Challenge Machinery Company makes no representation, warranty or recommendation regarding any modifications which may be required on non-current or unsupported products. The Challenge Machinery Company assumes no liability for any modification or alteration to any Challenge product, and any such modification or alteration to any Challenge product is not authorized by The Challenge Machinery Company. The availability of these manuals is solely for the purpose of providing reference information for the products.

This manual may not be complete in all aspects of product maintenance and repair. **All products should be used only by qualified and properly trained personnel, following proper safety procedures.** All products should be regularly inspected and maintained, and their condition, application and use should be periodically evaluated by qualified personnel. Only qualified and properly trained technicians should perform maintenance, repair and replacement procedures. Attempting these procedures without proper training may cause machine damage or operator injury!

Products may be unsupported by The Challenge Machinery Company due to age or the unavailability of parts from their original manufacturer. No parts or product support will be available to repair or maintain unsupported products. Older products may not be UL listed (if the product does not have a UL label it is not a listed product), and may not comply with applicable installation or other regulations or requirements if relocated to a new facility. Many municipalities require a product to be UL listed before an electrician will connect power to them. Often the cost of updating an older product to comply with current safety regulations is greater than the value of the product.

CHALLENGE

SCM/MSCM

Instruction and Parts Manual

Serial Numbers:
SCM-B-191178 and up,
MSCM-B-191178 and up

Sold and Serviced by

SOUTHWEST
BUSINESS PRODUCTS LTD.
From Bindings to Branding

The Challenge Machinery Company
6125 Norton Center Drive
Norton Shores, MI 49441-6081 USA

ChallengeMachinery.com

F.329-E
May 2019

1.0 Introduction

Keep this manual in a safe, convenient place for quick reference by operators and service personnel.

⚠ CAUTION **SAFETY ALERT!** This symbol means **CAUTION: Personal safety instructions!** Pay special attention to the instructions in bold type. Personal injury may result if the precautions are not read and followed.

READ THIS MANUAL BEFORE OPERATING! If you follow precautions and instructions, you should have years of trouble-free operation. Contact your Authorized Challenge Dealer for replacements.

FOR PARTS AND SERVICE, contact the Authorized Challenge Dealer from whom you purchased your machine. Use the illustrations and parts lists at the back of this manual to identify the correct parts needed. Always give the **SERIAL NUMBER** and **MODEL** of your machine to insure the correct parts are sent as soon as possible.

RECORD YOUR MACHINE SERIAL NUMBER in the space provided on the front cover of this manual. Also fill out the warranty card accompanying this manual and return it **DIRECTLY TO CHALLENGE.**

If you bought a used machine, it is important to have the following information on record at Challenge. Copy this page, fill in the information and send it care of The Challenge Service Department, 6125 Norton Center Drive • Norton Shores • MI 49441-6081.

CHALLENGE MODEL	SERIAL NUMBER	
ATTN	COMPANY	
ADDRESS		
CITY	STATE/PROVINCE	ZIP
PHONE	DATE INSTALLED	
DEALER NAME & CITY		

*** WARRANTY INFORMATION ***

PLEASE REVIEW THE ENCLOSED WARRANTY INFORMATION SHEET

It is very important that you read and understand the conditions outlined in the *Warranty Information Sheet* attached to the outside of the shipping container of your machine.

The *Warranty Information Sheet* must be filled out completely and returned to THE CHALLENGE MACHINERY COMPANY in order for the warranty to be issued for this machine.

Challenge® is a registered trademark of
The Challenge Machinery Company • 6125 Norton Center Drive • Norton Shores, MI 49441-6081
Copyright© 2019 by The Challenge Machinery Company. All rights reserved. Printed in the USA.

TABLE OF CONTENTS

1.0 Introduction 2
2.0 Safety 4
2.1 Precautions 4
2.2 Power Lockout Procedure 4
2.3 Warning Label Definitions 5
3.0 Packing List 6
4.0 Specifications 7
5.0 Accessories 8
6.0 Installation Guide 9
6.1 Inspecting Shipment 9
6.2 Unpacking 9
6.3 Leveling 9
6.4 Cleaning 9
6.5 Power Hook-up (SCM Models Only) 9
6.6 Knife and Die Installation 9
7.0 User's Guide 10
7.1 SCM/MSCM Diagrams 10
7.2 SCM (Power Model) Operation 12
7.3 MSCM (Manual Model) Operation 12
7.4 Side and Back Gauge Adjustment 12
7.5 Knife and Die Change 12
7.6 Straight Diagonal Cutting 15
7.7 Lubrication 16
7.8 Operating Tips 17
8.0 Appendix A - Maintenance Guide 18
8.1 Mechanical System 19
8.1.1 Knife Return Springs 19
8.1.2 Dovetail Gib 20
8.2 Hydraulic System (SCM Models Only) 21
8.2.1 Hydraulic Fluid Check 21
8.2.2 Replacing Hydraulic Fluid 22
8.2.3 Hydraulic Fluid Compatibility List 22
8.3 Electrical System (SCM Models Only) 22
8.3.1 Circuit Breaker Check 22
9.0 Appendix B–Parts List 24
9.1 Mechanical 24
9.1.1 A-8300-3 Main Assembly- Knife Head 24
9.1.2 A-8300-3 Main Assembly- Knife Head (Rear) 26
9.1.3 A-8300-3 Main Assembly- Underside 28
9.1.4 A-8300-3 Main Assembly- Hood 30
9.1.5 A-8300-3 Main Assembly- Base 32
9.1.6 A-8300-3 Main Assembly- MSCM, S/N's 142609M & Up 36
9.1.7 83001-1 Hydraulic Power Unit Assembly- SCM, Rev. A 38
9.2 Electrical 40
9.2.1 E-3356-1 Basic Machine Schematic 40
9.2.2 E-3357-1 Interconnection Diagram 41
9.2.3 EE-3358-1 Terminal Rail Assembly 42
10.0 Appendix C- Troubleshooting 44

2.0 Safety

2.1 Precautions

- By nature of the functions the cornering machine performs, it has some inherent dangers associated with its use. Read and thoroughly understand the safety precautions outlined below.
- This machine is designed for one-person operation. Never operate the machine with more than one person.
- Cut/crush hazard. Keep hands from under the knife and clamp while in operation.
- Do not operate with any covers removed.
- After maintenance, all covers should be re-installed using the original hardware before resuming normal operation.
- Safe use of this machine is the responsibility of the operator. Use good judgment and common sense when working with and around this machine.
- Read and understand all instructions thoroughly before using the machine. If questions remain, contact your Authorized Challenge Dealer. Failure to understand the operating instructions may result in personal injury.
- Only trained and authorized individuals should operate this machine.
- Disconnect power before performing maintenance. See Section 2.2 , Power Lockout Procedure.
- Observe all caution labels on this machine.
- When replacing hydraulic parts, loosen the connections slowly to relieve pressure. Never loosen connections while the machine is running. Allow hydraulic fluid to cool before performing maintenance on the hydraulic system.
- Never leave the machine unattended while running.
- If the machine operates abnormally, consult Appendix C- Troubleshooting.

2.2 Power Lockout Procedure

For maximum safety while making adjustments or repairs to your machine, be sure to disconnect power from the machine. Disconnect the power plug from its socket.

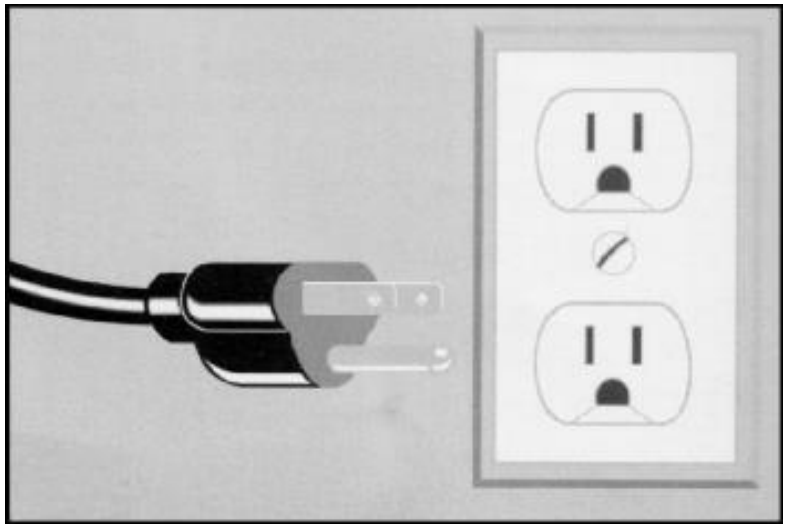

Figure 1 – Main Power Disconnect

2.3 Warning Label Definitions

The following warning label is found on the front cover of the machine. Read and understand the meaning of this symbol. If this label is lost from the machine, it should be replaced.

SINGLE PERSON OPERATION

Do not operate with more than one person.

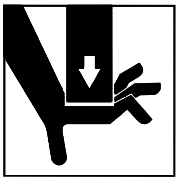

CUT/CRUSH HAZARD

Keep hands from under clamp and knife while in operation.

CRUSH HAZARD

Do not operate with any covers removed.

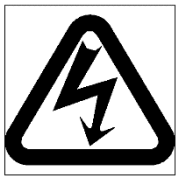

SHOCK HAZARD

Disconnect power before removing cover. Replace covers before operation.

3.0 Packing List

SCM
(**Single Cornering Machine)**

MSCM
(Manual Single Cornering Machine)

Part No.	Description	Qty.
CMC-431B	Single Cornering Machine (SCM)	1
	or	
CMC-431M	Manual Single Cornering Machine (MSCM)	1

Each machine includes the following tool kit items.

83027 or 8315-1	Hitch Pin Knife Hold-Down Block	1 -
S-1244-2	Lock Pin	1
W-171	1/8” hex wrench- long arm	1
W-172	3/16” hex T-wrench (extra long)	1
83014	Jogging Aid	1
W-130	3/16” hex wrench	1
6629	Gib Lube	1
W-105	1/4” hex wrench	1
W-131	5/16 hex wrench	1
83028	Knife Change Block (MSCM models only)	1

4.0 Specifications

Description	US Units	Metric Units
Maximum Pile Height – SCM Models	4”	102 mm
Maximum Pile Height – MSCM Models	2”	51 mm
Table Depth	24”	610 mm
Table Width	20”	508 mm
Table Height	35”	889 mm
Overall Height	51”	1295 mm
Footprint	20 X 24”	1295 X 610 mm
Net Weight (SCM)	190 lb.	87 kg
Shipping Weight (SCM)	265 lb.	121 kg
Net Weight (MSCM)	145 lb.	66 kg
Shipping Weight (MSCM)	220 lb.	100 kg
Electrical (SCM Models Only)		
120 V / 13.5 A / 1 phase, 60 Hz	½ HP	0.37 kW
20 A service size		
230 V / 8 A / 1 phase, 50/60 Hz		
15 A service size		

5.0 Accessories

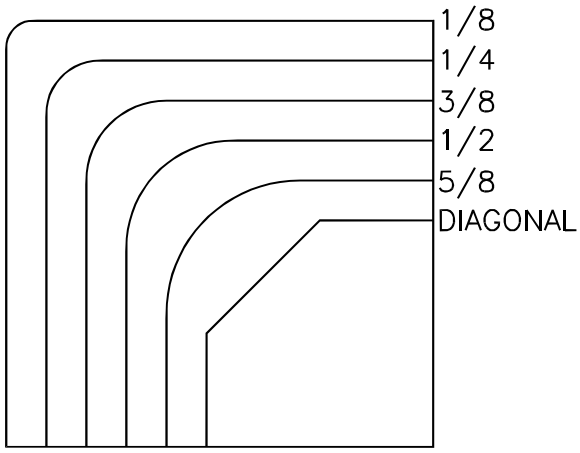

Figure 2 Knives and Dies

Size	Knife Number	Die Number
1/8” / 3.2 mm	6721-2	6722-2
1/4" / 6.3 mm	6721-4	6722-4
3/8” / 9.5 mm	6721-6	6722-6
1/2" / 12.7 mm	6721-8	6722-8
5/8” / 15.9 mm	6721-10	6722-10
Straight Diagonal	6761	6762
1-1/4 / 32 mm maximum Straight Diagonal cut		

6.0 Installation Guide

6.1 Inspecting Shipment

The cornering machine has been carefully packed to prevent damage during shipment. However, claims for damage or loss are the responsibility of the recipient. Inspect all shipments as soon as they are received. If there is any noticeable damage, note it on the freight bill. Visual and/or hidden damage must be reported to the claims department of the carrier within 15 days. Contact your dealer if you need any assistance. Check the contents of the crate against the packing list on page 6. Make sure there are no missing items.

6.2 Unpacking

Remove the packing materials and braces. Use a safe material handling device to lift the machine off the skid. Secure the machine to any lifting or moving device using lifting straps. The machine weighs over 250 lbs. (113 kg). If no lifting or moving devices are used, use at least two people to move the machine. The machine should be lifted by gripping the edges of the table. **Do not push or pull the machine. A tip hazard may result!** Note that the installation location must have a 120 VAC wall outlet nearby.

6.3 Leveling

Once positioned, level the machine to the floor by turning one or more of the four levelers to the floor. Turning a leveler clockwise moves it to the floor.

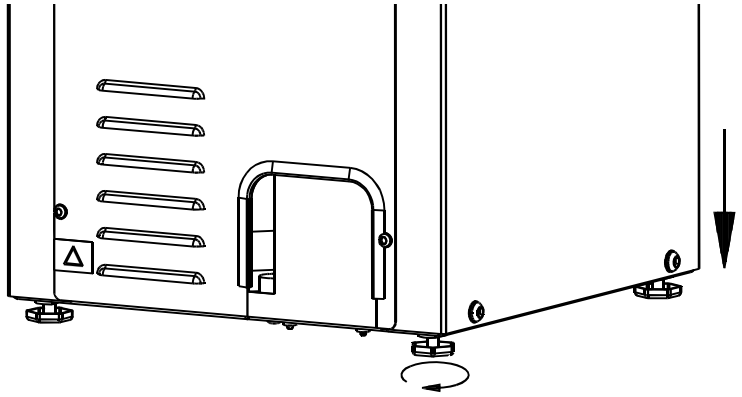

Figure 3 - Leveling

6.4 Cleaning

It may be necessary to clean the machine after installation. It may be cleaned with a solution of dish soap and water. Do not use petroleum or acid based solvents to clean the machine. Damage may result.

6.5 Power Hook-up (SCM Models Only)

Insert the power plug into nearby wall outlet. The machine should operate on a 20 Amp circuit. If the pump motor stalls or operates sluggishly, test the line voltage. To many machines on one circuit will reduce the voltage to each, affecting their performance.

6.6 Knife and Die Installation

See Section 7.5 Knife and Die Change on page 12.

7.0 User's Guide

7.1 SCM/MSCM Diagrams

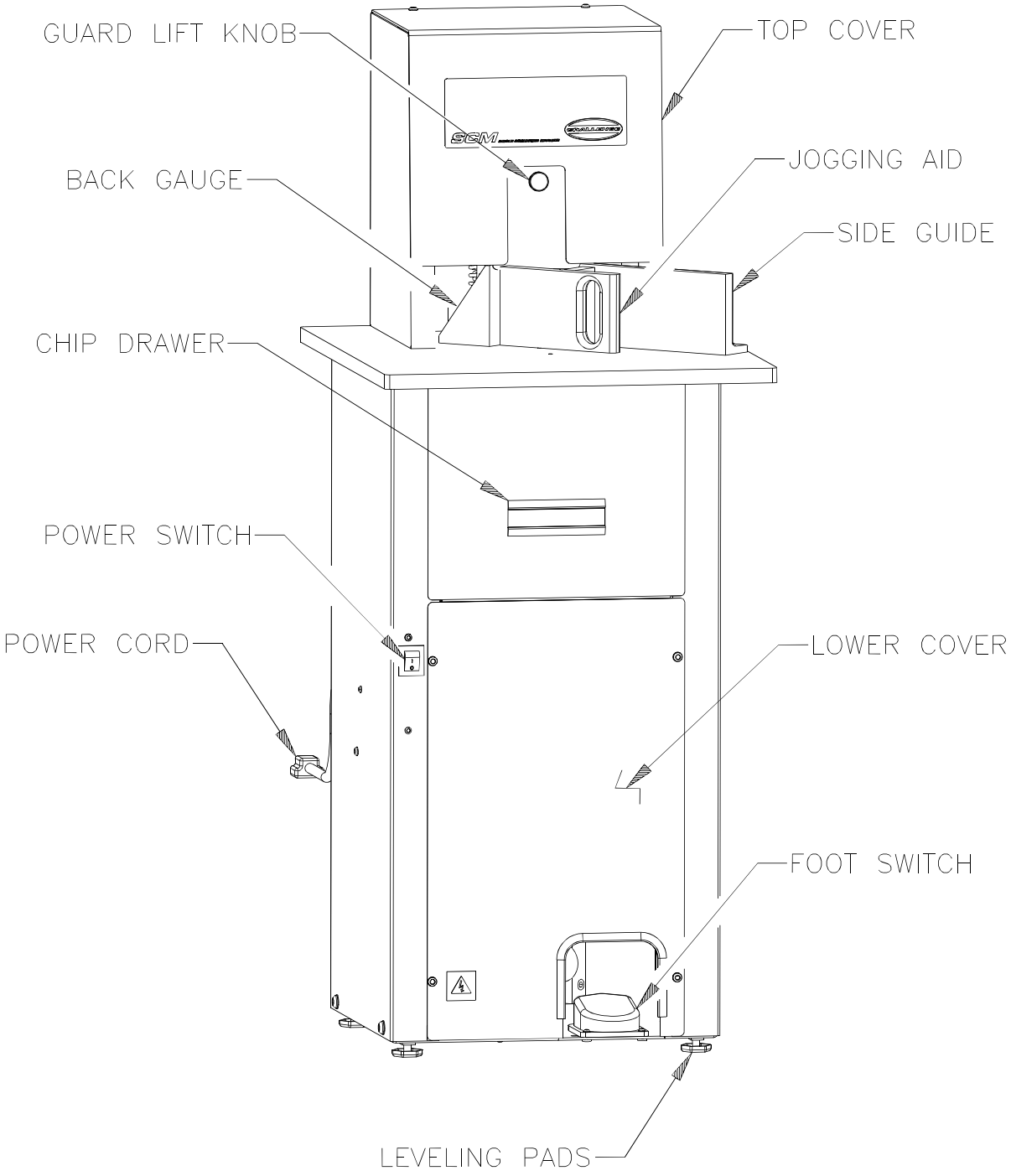

Figure 4 - SCM (Power Model) Components

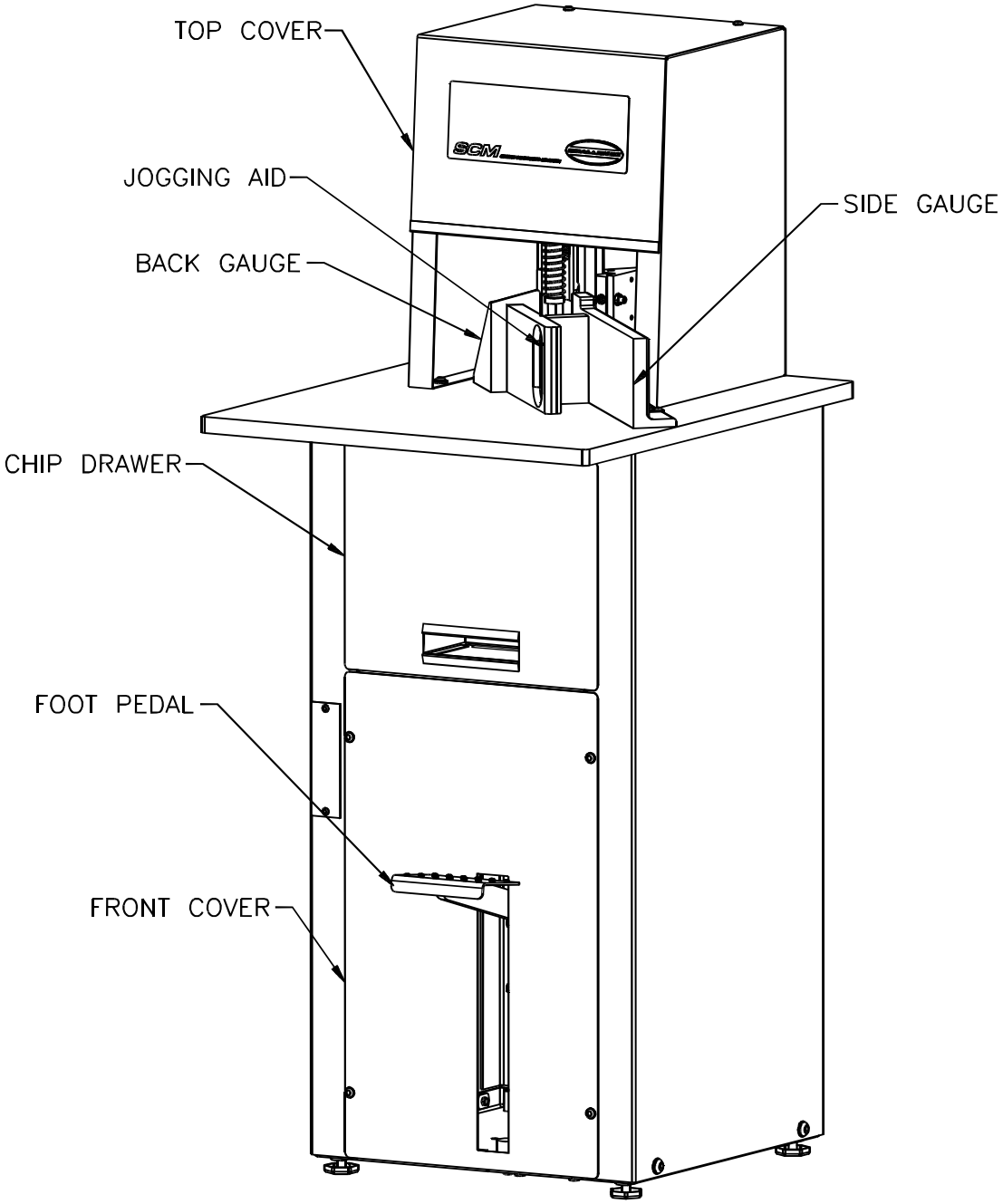

Figure 5 - MSCM (Manual Model) Components

7.2 SCM (Power Model) Operation

1. Switch on the main power. The main power switch is located on the left side of the stand, underneath the table.
2. Lift the top cover guard and load the stock using the jogging aid. Jog the stock against the side gauge to line it up. Push and jog it against the back gauge.

⚠ CAUTION **Keep hands away from the knife and plunger! Always use the jogging aid while cutting.**

3. Depress and hold the foot switch to cut. Release the foot switch after the knife stops moving down. The knife returns to the up position. The hydraulic motor will shut off.

7.3 MSCM (Manual Model) Operation

1. Load the stock using the jogging aid. Jog the stock against the side gauge to line it up. Push and jog it against the back gauge.

⚠ CAUTION **Keep hands away from the knife and plunger! Always use the jogging aid while cutting.**

2. Depress the foot pedal to cut. Let up on the foot pedal after the cut is complete.

7.4 Side and Back Gauge Adjustment

1. Switch off the machine and disconnect power. See Power Lockout Procedure on page 4.
2. Open the top cover.
3. Loosen the side gauge mounting screws and use a straight edge to align it tangent to the radius on the die. Tighten the mounting screws.
4. Loosen the back gauge mounting screws. Place a square against the side gauge.
5. Adjust the back gauge square to the side gauge and tangent to the radius on the die. Tighten the mounting screws.
6. Reconnect power to the machine

7.5 Knife and Die Change

⚠ CAUTION **Sharp knives! Even used knives are extremely sharp. Severe lacerations may result from improper handling of knives.**

1. Open the top cover.

(steps 2 – 7 are for MSCM models ONLY):
2. Place the solid plastic square block under the clamp plunger.
3. Press down and hold the foot pedal.
4. Insert the knife change lock pin into the first (higher) hole in pressure foot guide shaft (Figure 6) and release the foot pedal.
5. Place the jogging aid under the clamp plunger as shown in Figure 6.
6. Press down and hold the foot pedal.
7. Remove the knife change lock pin from the highest hole and insert it into the lower hole (Figure 6), then release the foot pedal.

(steps 8 – 10 are for SCM models ONLY):
8. Place the jogging aid under the clamp plunger as shown in Figure 6.
9. Switch on power and press down and hold the foot switch.
10. Insert the knife change lock pin into lower hole in pressure foot guide shaft (Figure 6) and release the foot switch.

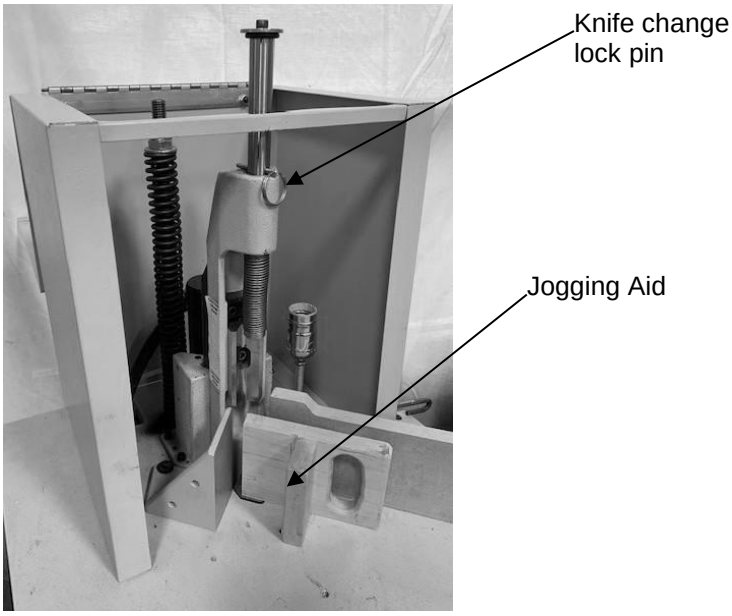

Figure 6 – Block Up the Clamp Plunger

11. Back off the knife adjustment setscrew to prevent damage to the new knife.

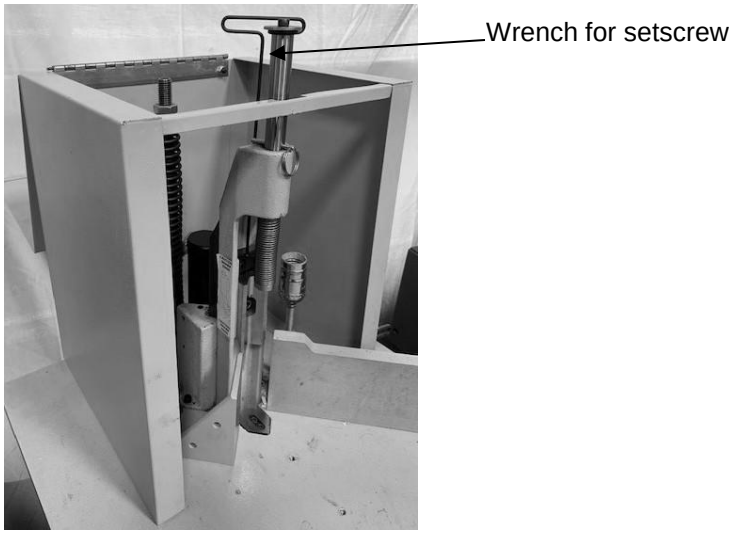

Figure 7 – Back Off the Setscrew

12. Remove the die mounting screws and die.
13. Remove the knife mounting screws and knife.
14. Place the new die on its mounting surface on the table and reinstall its mounting screws with the pushed as far as possible toward the operator. Do not tighten.
15. Insert the new knife against the adjustment setscrew and install the knife mounting screw. Snug the screw but do not tighten.
16. Remove the chip drawer.
17. Switch on the machine and place a piece of paper over the table sensor (SCM models only).
18. Depress the foot switch/foot pedal and hold it down.
19. Block the entire cutting head down using the block or hitch pin as shown in Figure 8.

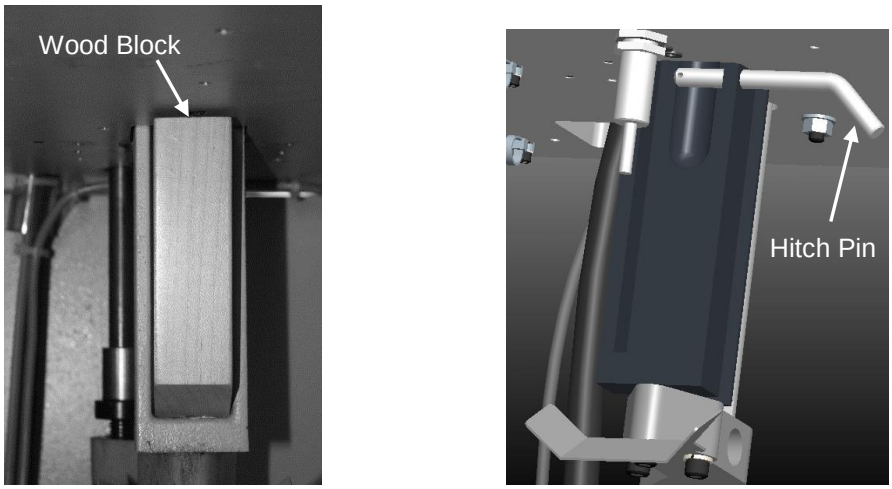

Figure 8 – Lock the Cutting Head Down

20. Release the foot switch/foot pedal.
21. Switch off the machine (SCM models only).
22. Place a piece of tissue paper between the knife and the die to ensure proper clearance as shown in Figure 9.

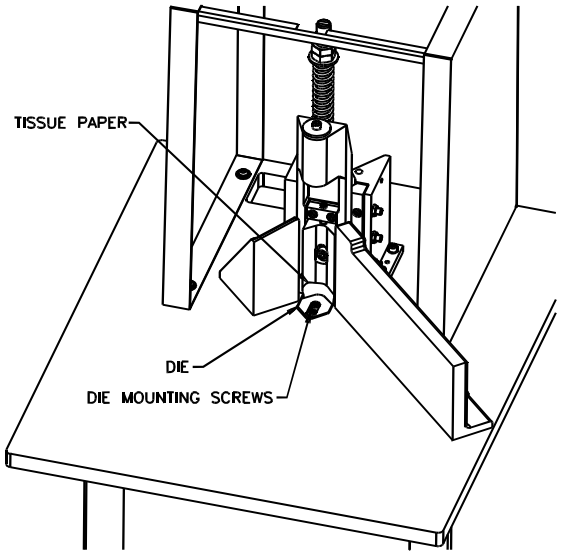

Figure 9 – Tissue Paper between Knife and Die

23. Using the knife adjustment setscrew, adjust the knife until the cutting edge is 1/8" above the surface on which the die mounts.
24. Securely tighten the knife mounting screw.
25. Adjust the die such that the radius of the die makes perfect contact with the radius of the knife.

Notice: As of November 2011, all Challenge dies have been redesigned to improve trimming of the bottom sheets. You may notice differences between new dies and old style dies. Install new dies as the old style dies were installed, but note the following differences:

- The radius area of the die will fit more tightly into the radius area of the knife.

- There will be a more noticeable gap between the area of the knife and die that runs straight after the radius.

Correct installation will look like the following diagram.

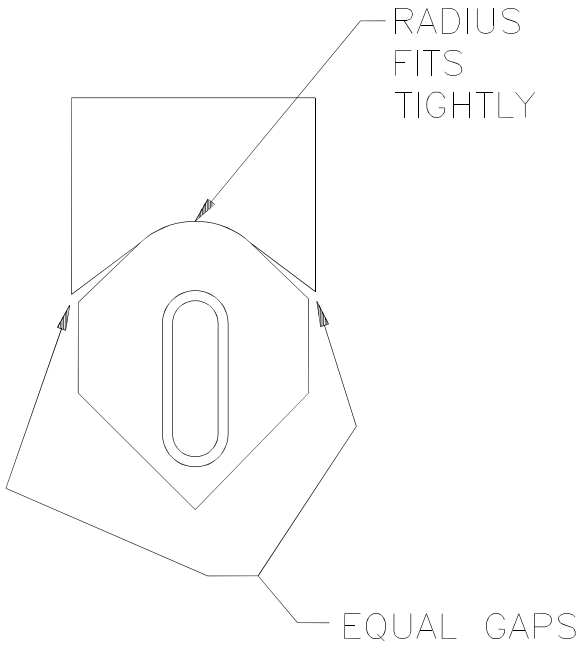

Figure 10 – Knife and Die alignment

26. Securely tighten the die mounting screws.
27. Remove all tools from the table. Close the top cover and reconnect power to the machine.
28. Switch on the machine (SCM models only).
29. Depress and hold down the foot switch/foot pedal. Carefully remove the hitch pin or hold-down block.
30. Release the foot switch/foot pedal.
31. Remove the knife change lock pin by following steps 2 through 10 in reverse order.
32. Reinstall the chip drawer.

7.6 Straight Diagonal Cutting

Adjusting the side gauge will change the length of a straight diagonal cut. This length should not exceed 1" when cutting 4" thick piles. It is possible to cut piles 2" thick and below at 1-1/4" length of diagonal. See section 7.4 Side and Back Gauge Adjustment for side gauge adjustment instructions.

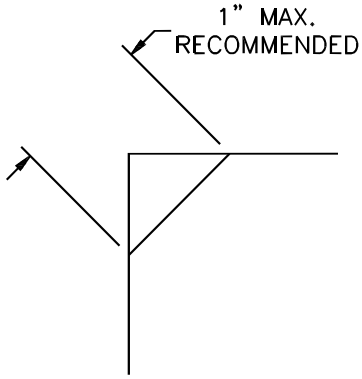

Figure 11 - Maximum Recommended Cut

7.7 Lubrication

Proper lubrication is critical to prevent excessive wear to the machine.

Gib Lube Weekly

Light Machine Oil Weekly

⚠ CAUTION **Disconnect main power.**
See Section 2.2 Power Lockout Procedure.

- Use gib lube to lubricate the gib and both sides of the dovetail.
- Use light machine oil to knife return rod and springs. Wipe off excess oil.

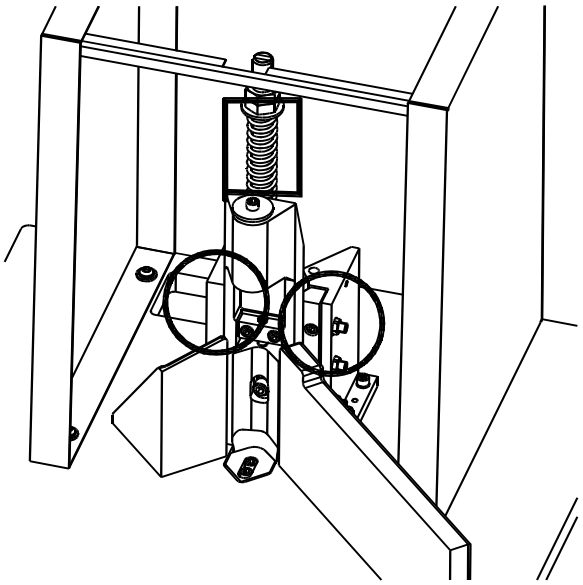

Figure 12 - Lubrication Locations

- Use light machine oil to lubricate the rear pillow blocks, the foot pedal pull-down pin, and the pull-down shoulder screw on the (MSCM models only).

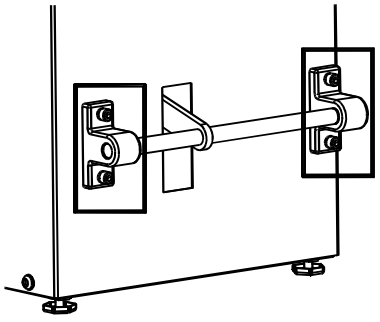

Figure 13 - Pillow Blocks

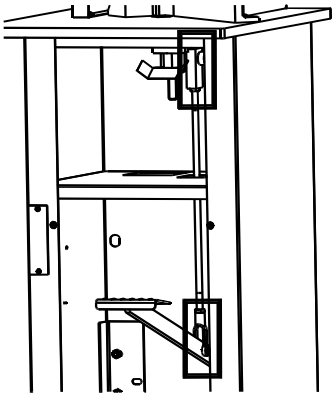

Figure 14 - Pin and Shoulder Screw

7.8 Operating Tips

- Keep the knife and die sharp and in good alignment. A dull knife and poor adjustments lead to irregular cuts. New or re-sharpened dies should be purchased through an authorized Challenge dealer in order to insure proper sharpening.
- Exercise care when handling and changing knives.
- Firm placement of paper against side and back gauges will ensure good cuts.
- Unusual noise and irregular operation indicates a maintenance check is due. A qualified service technician should check the machine.
- Follow the routine maintenance procedures. Keep chips off bearings and sliding parts. Lubricate frequently with the Gib Lube provided in the toolkit. Always disconnect power before lubricating. See Power Lockout Procedure on page 4.

8.0 Appendix A - Maintenance Guide

⚠ NOTICE ⚠

The instructions on the following pages are for the use of trained service personnel only!

Attempting to perform repair and replacement procedures without proper training may cause machine damage or operator injury!

PARTS CUSTOMERS: The Challenge Machinery Company provides parts with the express understanding that they are to replace parts found missing or no longer serviceable on equipment designed and/or manufactured at Challenge. The Challenge Machinery Company assumes no liability for any modification or alteration to any Challenge products, and any such modification or alteration to any Challenge product is not authorized by The Challenge Machinery Company. Any modification or alteration of any Challenge product will void any remaining warranty.

8.1 Mechanical System

8.1.1 Knife Return Springs

It may be necessary to adjust the knife return spring(s) at some time. More compression increases the return force while less compression reduces the return force. The length of the spring should be adjusted between 13-3/4 and 14 inches. Do not compress the spring(s) more than necessary. Over-compression will cause undo wear to the spring(s). The following procedure describes how to adjust the spring compression.

⚠ CAUTION **Disconnect main power.**
See Section 2.2 Power Lockout Procedure.

1. Switch off the machine and disconnect power (SCM models only).
2. Open the top cover.
3. Loosen the top jam nut on the end of the knife return rod.
4. Turn the lower jam nut clockwise to increase the compression on the spring(s).
5. Turn the lower jam nut counter-clockwise to decrease the compression on the spring(s).

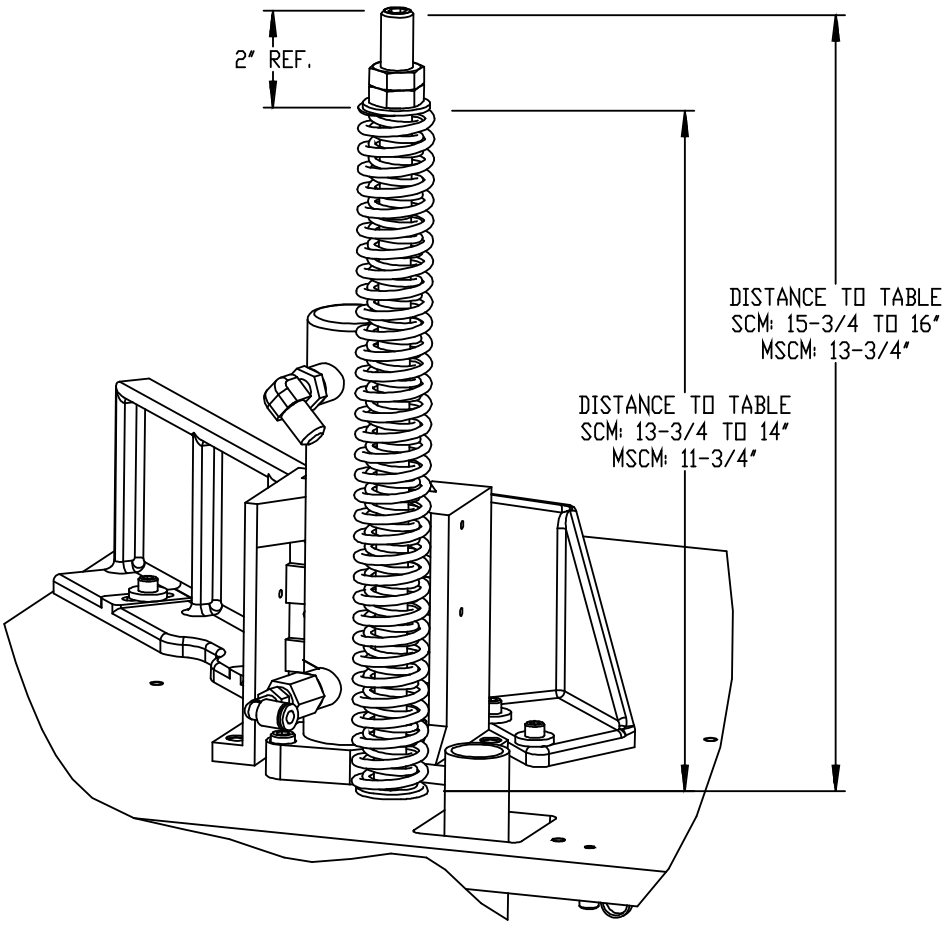

Figure 15 – Spring Compression Adjustment

6. Retighten the top jam nut onto the lower jam nut to lock it in place.
7. Close the top cover.
8. Reconnect power to the machine (SCM models only).

8.1.2 Dovetail Gib

The dovetail gib may require adjustment occasionally. The following procedure describes how to adjust the dovetail gib.

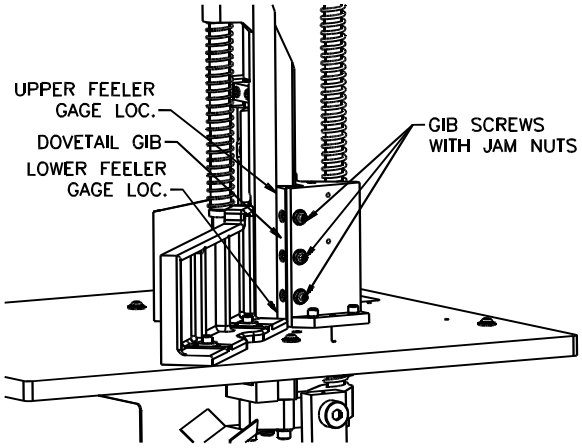

Figure 16 - Gib Adjustment

1. Remove the chip drawer.
2. Switch on the machine. Use scrap to cover the paper sensor in the table. Depress and hold the foot switch/foot pedal.
3. Insert the knife hold-down block or hitch pin as shown in Figure 17.

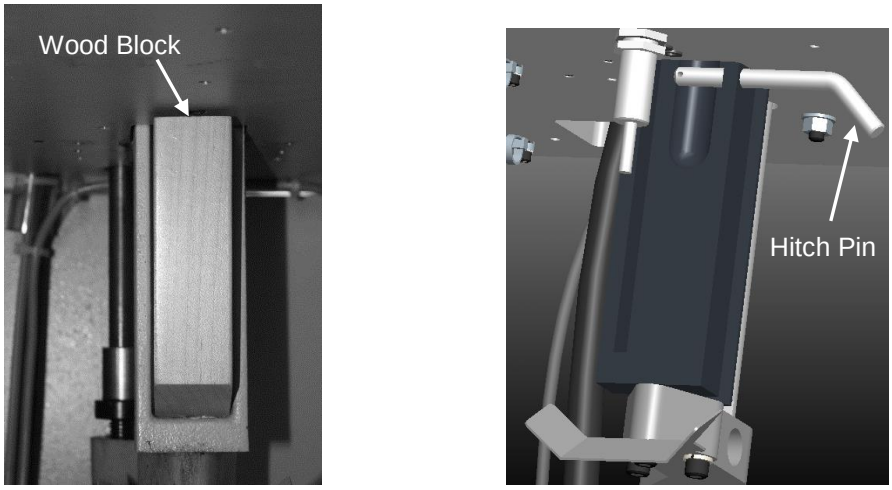

Figure 17 – Lock the Cutting Head Down

⚠ CAUTION **Disconnect main power.**
See Section 2.2 Power Lockout Procedure.

4. Switch off the machine and disconnect power (SCM models only).
5. Open the top cover.
6. Loosen three, gib-screw jam nuts and gib screws.
7. Place a .002” feeler gauge between the dovetail and the gib at the lower end of the gib.
8. Adjust the lower gib adjustment screw until the lower end of the gib contacts the feeler gauge. Lock its jam nut in place and remove the feeler gauge.

9. Close the top cover.
10. Reconnect power, and switch on the machine (SCM models only).
11. Use scrap to cover the paper sensor in the table. Depress and hold the foot switch/foot pedal to remove the knife hold-down block or hitch pin

⚠ CAUTION **Disconnect main power.**
See Section 2.2 Power Lockout Procedure.

12. Switch off the machine and disconnect power (SCM models only).
13. Open the top cover.
14. Place the .002" feeler gauge between the dovetail and the gib at the upper end of the gib.
15. Adjust the two, upper gib-screws until the gib contacts the feeler gauge. Lock their jam nuts in place and remove the feeler gauge.
16. Close the top cover and reinstall the chip drawer.

8.2 Hydraulic System (SCM Models Only)

The hydraulic fluid should be checked every six months and topped off as necessary. Depending on usage, it may need to be checked more frequently.

8.2.1 Hydraulic Fluid Check

To check the hydraulic fluid level:

⚠ CAUTION **Disconnect main power.**
See Section 2.2 Power Lockout Procedure.

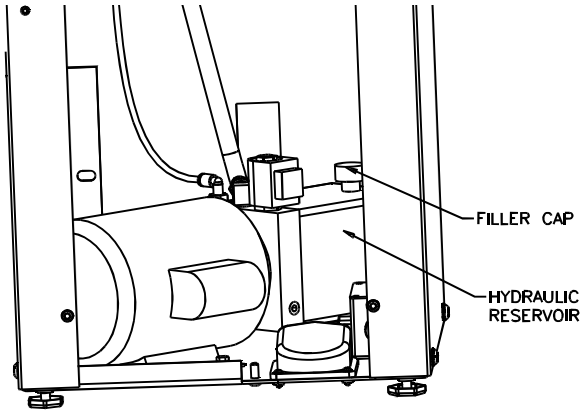

Figure 18 – Hydraulic Reservoir Location

1. Switch off the machine and disconnect power.
2. Remove the front cover.
3. View the hydraulic reservoir sight line.
4. If the fluid level is below the fill line on the side of the tank, remove the filler cap and add fluid until it reaches the filler line. **DO NOT OVERFILL!**
5. Only use ISO VG 100 hydraulic fluid. This can be ordered from Challenge in five-gallon containers, part number **S-1991-3**. See Section 8.2.3 . Do not use transmission fluid. Transmission fluid will damage power unit.
6. Screw the filler cap back into the reservoir and replace the front cover.

8.2.2 Replacing Hydraulic Fluid

The hydraulic fluid should be replaced annually.

⚠ CAUTION **Do not replace the hydraulic fluid while it is hot.** Severe burns may result.

Use the following procedure to replace the hydraulic fluid:

⚠ CAUTION **Disconnect the main power.**
See Section 2.2 Power Lockout Procedure.

1. Switch off the machine and disconnect main power.
2. Remove the front cover.
3. Remove the filler cap from the reservoir.
4. Use a transfer pump or syphoning tool to remove the used fluid from the reservoir. Transfer pumps can be found at most hardware stores.
5. Refill tank to the fill line.
6. Replace the front cover.
7. Reconnect power to the machine.

8.2.3 Hydraulic Fluid Compatibility List

Any ISO VG 100 can be used as a substitute for S-1991-3 hydraulic fluid.

8.3 Electrical System (SCM Models Only)

8.3.1 Circuit Breaker Check

If the machine is plugged in but the hydraulics will not turn start when the footswitch is depressed, the circuit breaker may be tripped.
To check the circuit breaker:

⚠ CAUTION **Disconnect the main power.**
See Section 2.2 Power Lockout Procedure.

1. Switch off the machine and disconnect main power.
2. Use a 5/32” hex wrench to remove the lower cover.
3. The circuit breaker is located on a mounting rail behind the lower panel.
4. If the indicator on the circuit breaker is red, it has not been tripped. If the indicator on the circuit breaker is green, it has been tripped.
5. If the indicator is green, push the circuit breaker lever until the indicator is red.

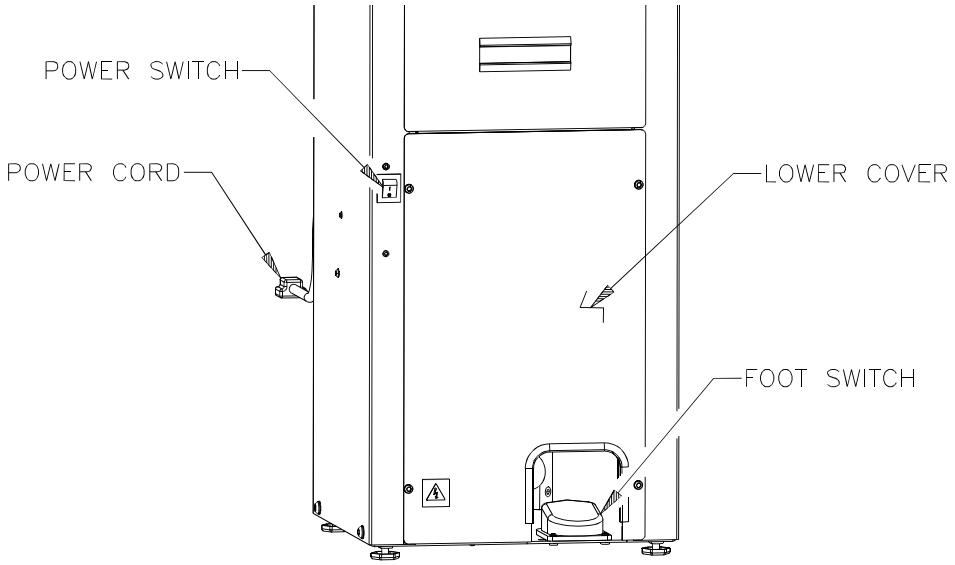

Figure 19 – Remove Lower Cover to Access Circuit Breaker

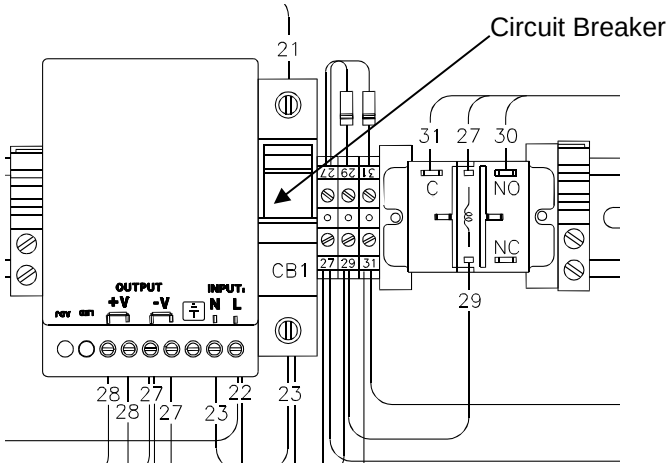

Figure 20 – Circuit Breaker, CB1, on Terminal Rail

9.0 Appendix B–Parts List

9.1 Mechanical

9.1.1 A-8300-3 Main Assembly- Knife Head

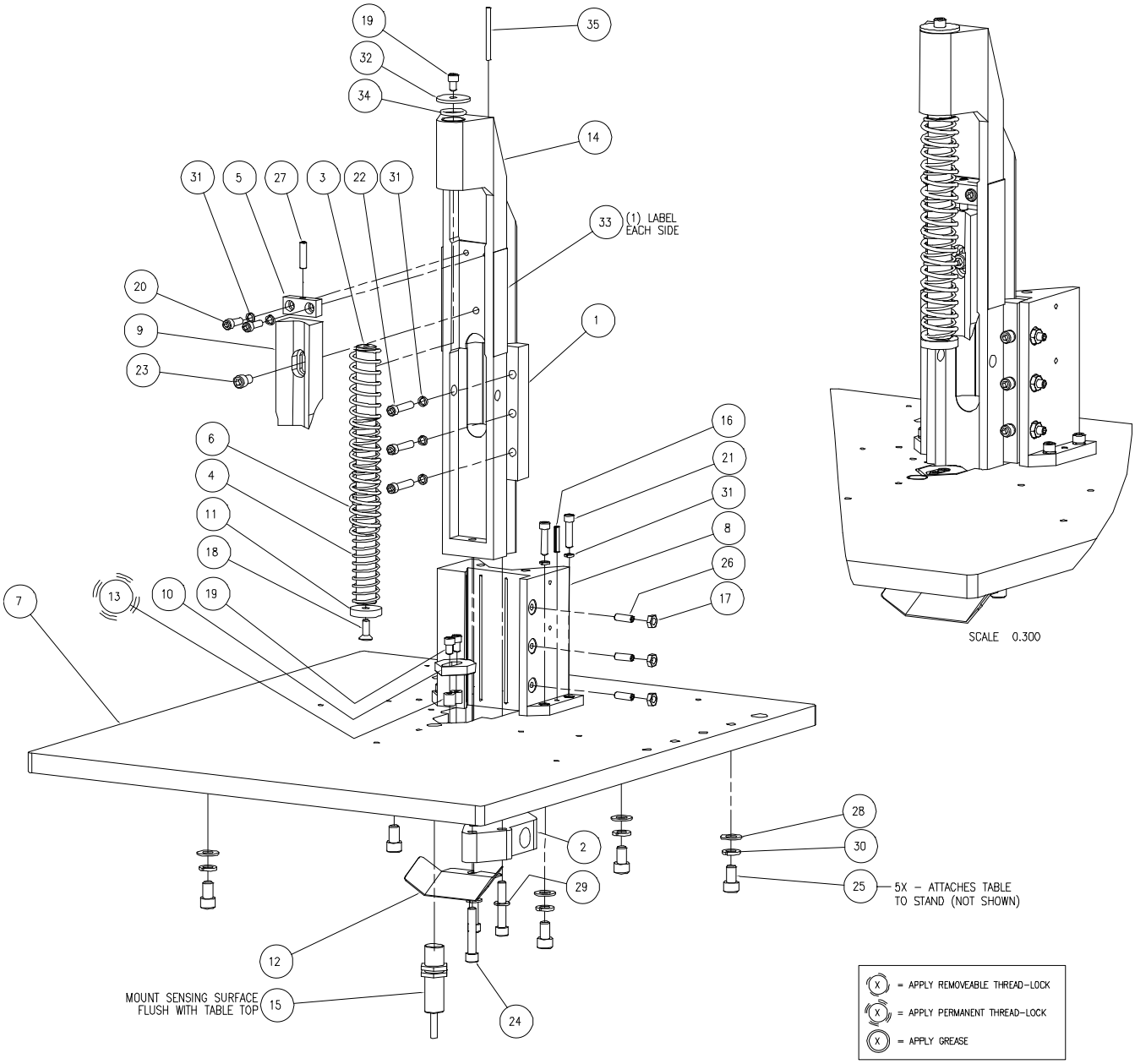

A-8300-3 Main Assembly- Knife Head Parts List

Item	Part No.	Description	Qty.
1	6707	GIB	1
2	6708	ARM- PUSH	1
3	6726	GUIDE- PRESSURE FOOT	1
4	6727	SPRING- CLAMP	1
5	6733	BLOCK- KNIFE BACKUP	1
6	83020	CLAMP SPRING- OUTER, LH WOUND	1
7	6705-2	SCM TABLE	1
8	6706-2	MOUNTING BRACKET- DOVETAIL	1
9	6721-6	KNIFE	1
10	6722-6	DIE SHOE	1
11	6724-2	PRESSURE FOOT, STRAIGHT DIAGONAL	1
12	6749-5	CHIP DEFLECTOR	1
13	83007-0407	THREADED INSERT	2
14	A-6736	BEARING AND KNIFE HOLDER ASM	1
15	EE-3295-2	MACHINE LOADED PROX. ASM.	1
16	H-21S-187-1000	ROLL PIN - 3/16 X 1	2
17	H-6424-4	NUT - 1/4-20 HEX JAM	3
18	H-6909-406	SCREW - 1/4-20 X 3/4" FLAT HEAD CAP	1
19	H-6918-403	SCREW - 1/4-20 X 3/8 SOCKET HEAD CAP	3
20	H-6918-406	SCREW - 1/4-20 X 3/4 SOCKET HEAD CAP	2
21	H-6918-408	SCREW - 1/4-20 X 1 SOCKET HEAD CAP	4
22	H-6918-410	SCREW - 1/4-20 X 1-1/4 SOCKET HEAD CAP	3
23	H-6918-505	SCREW - 5/16-18 X 5/8 SOCKET HEAD CAP	1
24	H-6918-514	SCREW - 5/16-18 X 1-3/4 SOCKET HEAD CAP	3
25	H-6918-605	SCREW - 3/8-16 X 5/8 SOCKET HEAD CAP	5
26	H-6938-412	SCREW - 1/4-20 X 3/4 CUP SOC SET	3
27	H-6938-416	SCREW - 1/4-20 X 1 CUP SOC SET	1
28	H-7321-6	WASHER - 3/8 SAE PLAIN	5
29	H-7327-10	WASHER - 5/16 MEDIUM LOCK	3
30	H-7327-12	WASHER - 3/8 MEDIUM LOCK	5
31	H-7329-4	WASHER - 1/4 HIGH COLLAR LOCK	9
32	S-982	WASHER	1
33	S-1781-198	LABEL- SHARP EDGE	2
34	S-1810-16	O-RING	1
35	SU-46-104	3/16 FELT WICKING	1

9.1.2 A-8300-3 Main Assembly- Knife Head (Rear)

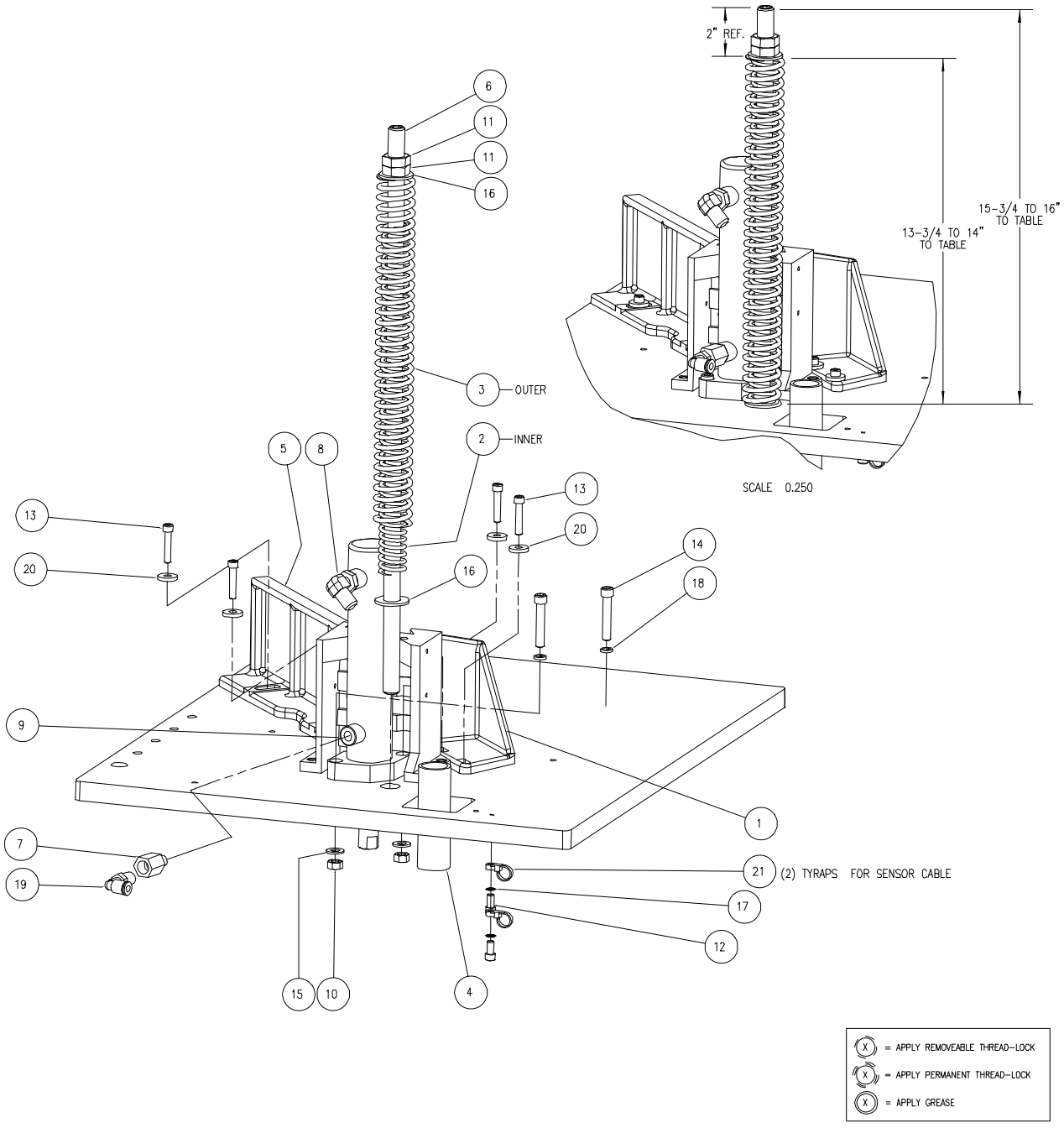

A-8300-3 Main Assembly- Knife Head (Rear) Parts List

Item	Part No.	Description	Qty.
1	6716	GAGE- LH- DCM	1
2	6730	SPRING- INNER	1
3	6731	SPRING- RETURN (OUTER)	1
4	6775	TUBIING	1
5	8312	SIDE GUIDE- R.H.	1
6	A-6737	RETURN ROD ASM	1
7	H-233	ADAPTER - PIPE TO O-RING	1
8	H-230-10	ELBOW- ORING TO TUBE	1
9	H-344-1	CYLINDER ASM- SCM	1
10	H-6417-5	NUT - 5/16-18 HEX	2
11	H-6424-10	NUT - 5/8-11 HEX JAM	2
12	H-6918-404	SCREW - 1/4-20 X 1/2 SOCKET HEAD CAP	2
13	H-6918-410	SCREW - 1/4-20 X 1-1/4 SOCKET HEAD CAP	4
14	H-6918-514	SCREW - 5/16-18 X 1-3/4 SOCKET HEAD CAP	2
15	H-7321-5	WASHER - 5/16 SAE PLAIN	2
16	H-7321-10	WASHER - 5/8 SAE PLAIN	2
17	H-7324-#10	WASHER - #10 INT TOOTH	2
18	H-7329-5	WASHER - 5/16 HIGH COLLAR LOCK	2
19	P-503-402	ELBOW-1/4 TUBE X 1/4 NPT	1
20	S-1815	WASHER	4
21	S-1694-2	TYRAP - #10	2

9.1.3 A-8300-3 Main Assembly- Underside

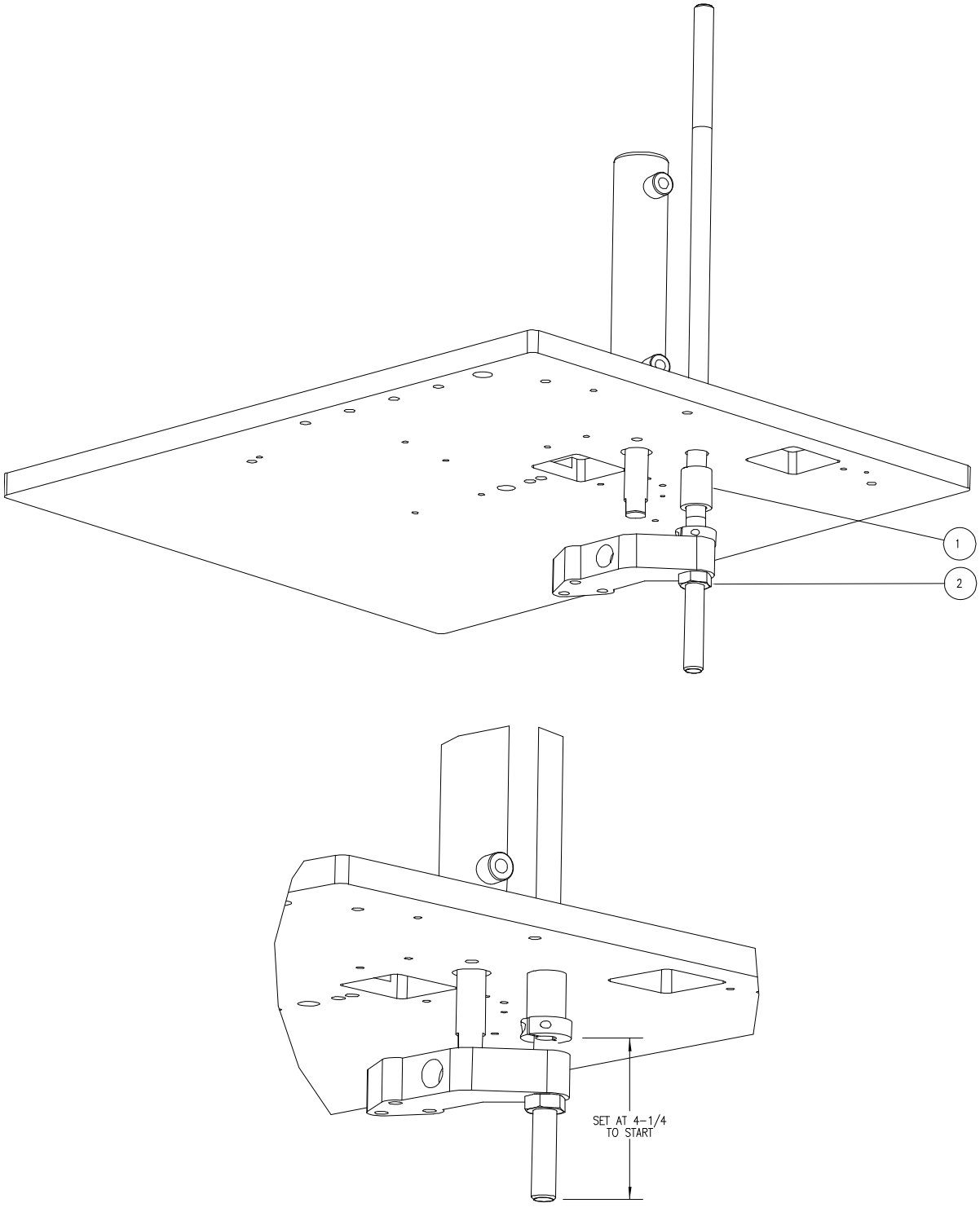

A-8300-3 Main Assembly- Underside Parts List

Item	Part No.	Description	Qty.
1	6743	SPACER	1
2	H-6424-10	NUT - 5/8-11 HEX JAM	1

9.1.4 A-8300-3 Main Assembly- Hood

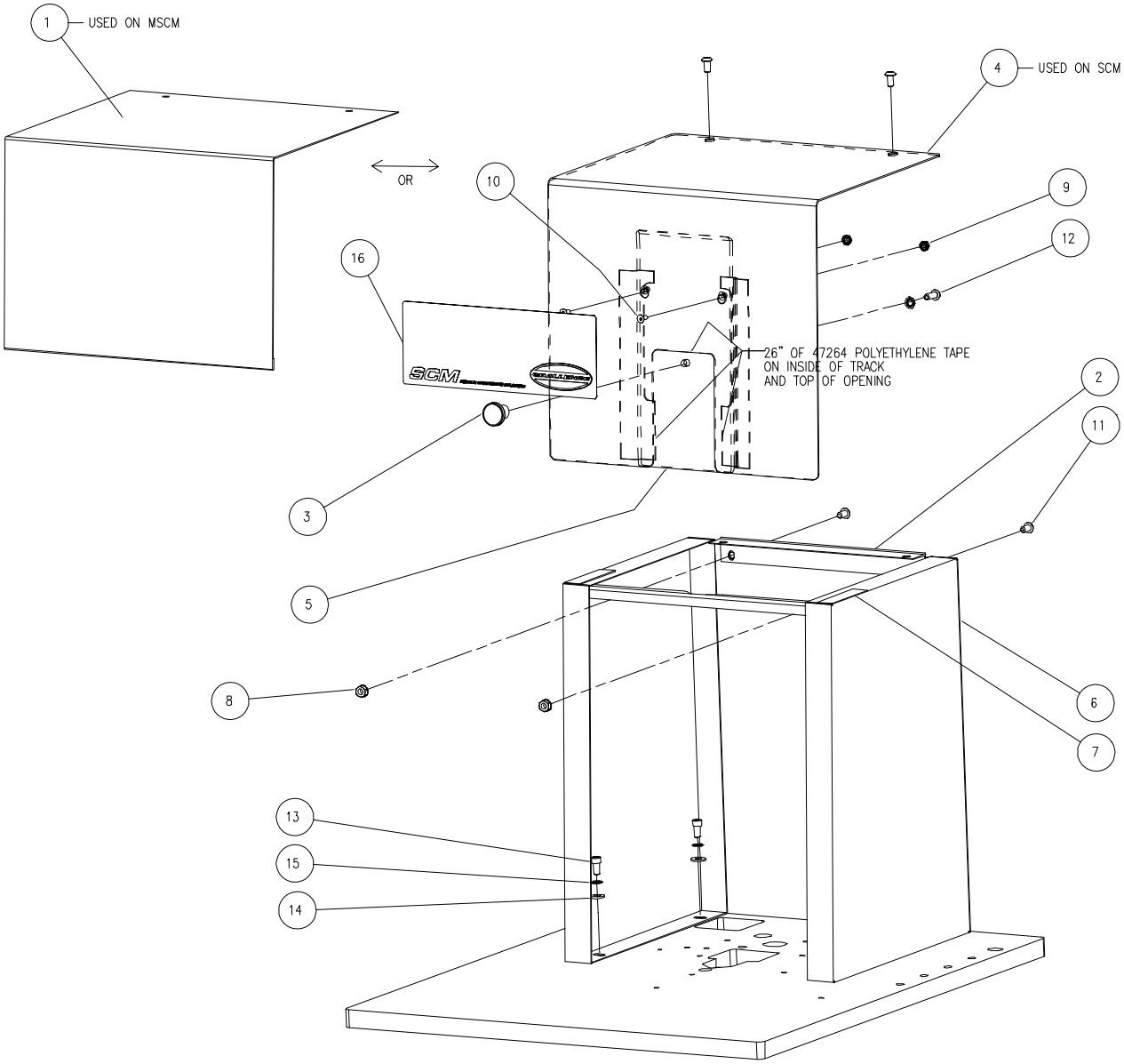

A-8300-3 Main Assembly- Hood Parts List

Item	Part No.	Description	Qty.
1	8306	TOP COVER- SCM	1
2	8307	HINGE	1
3	38029	KNOB	1
4	83023	TOP COVER ASSEMBLY	1
5	83024	SLIDING GAURD	1
6	A-8302	COVER ASSEMBLY	1
7	A-7545REP003	CORK STRIP	2
8	H-6423-4	NUT - 1/4-20 HEX KEP	4
9	H-6423-#8	NUT - #8-32 HEX KEP	2
10	H-6909-83204	SCREW - #8-32 X 1/2" FLAT HEAD CAP	2
11	H-6910-404	SCREW - 1/4-20 X 1/2 BUTTON HEAD CAP	4
12	H-6910-406	SCREW - 1/4-20 X 3/4 BUTTON HEAD CAP	1
13	H-6918-404	SCREW - 1/4-20 X 1/2 SOCKET HEAD CAP	4
14	H-7321-4	WASHER - 1/4 SAE PLAIN	4
15	H-7324-8	WASHER - 1/4 INT TOOTH	5
16	S-1781-119	LABEL- FRONT PANEL	1

9.1.5 A-8300-3 Main Assembly- Base

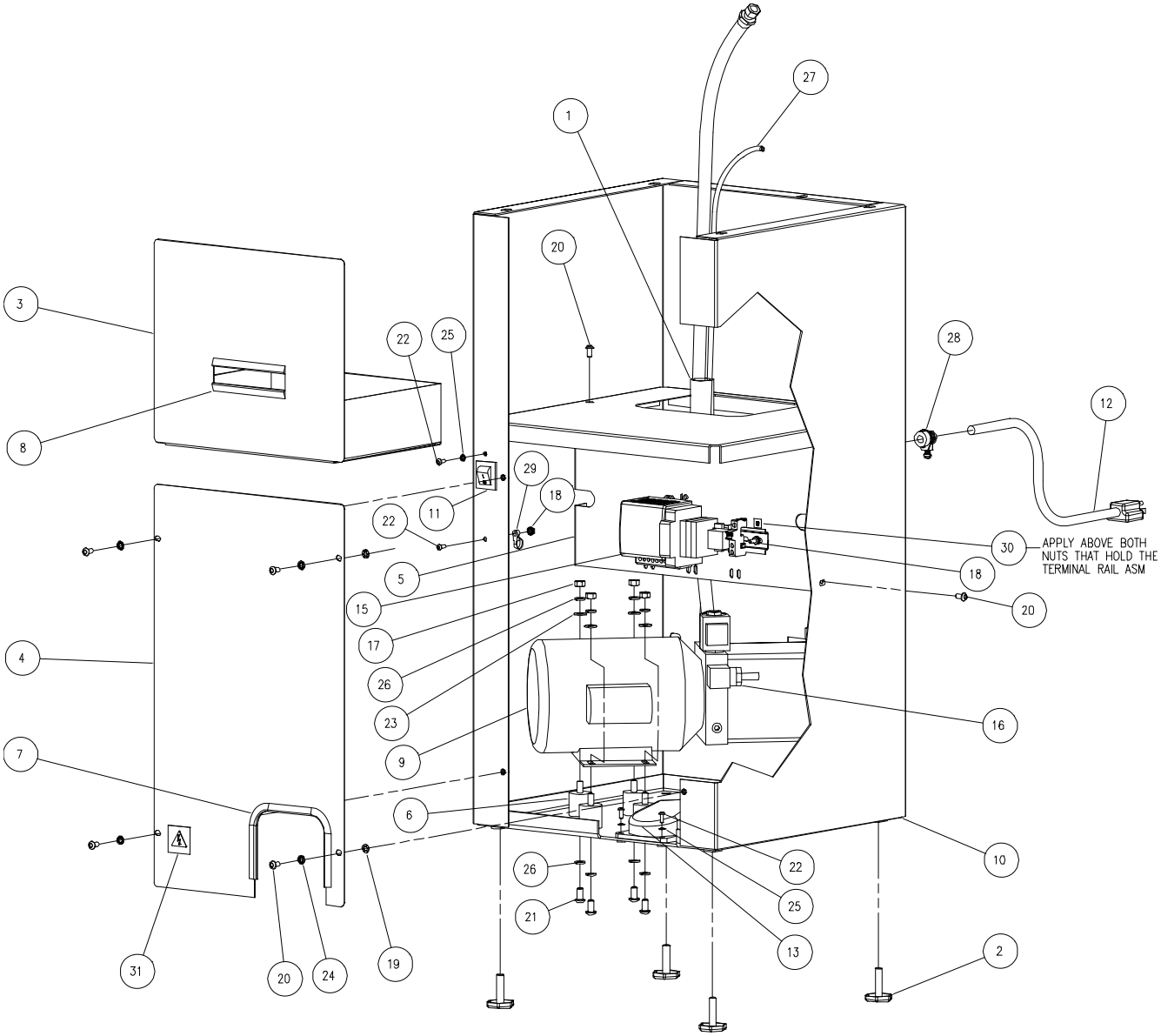

A-8300-3 Main Assembly- Base Parts List

Item	Part No.	Description	Qty.
1	6775	TUBIING	1
2	16543	LEVELER- BASE	4
3	83010	DRAWER ASSEMBLY	1
4	83015	FRONT COVER- POWER- SCM	1
5	83025	ELECTRICAL MOUNTING BRACKET	1
6	40016-8	MOUNT - VIBRATION	4
7	7032-M	TRIM - 12" LONG	1
8	7032-M	TRIM - 5" LONG	2
9	83001-1	HYD. POWER UNIT ASM., 24VDC COIL	1
10	A-4656-6	SCM STAND WELDMENT	1
11	E-1140-20	ROCKER SWITCH LIGHTED	1
12	EE-3045	CABLE ASM- POWER CORD	1
13	EE-875-6	FOOT SWITCH ASSEMBLY	REF
14	EE-3049	CABLE ASM- HYDRAULIC MOTOR	1
15	EE-3358-1	TERMINAL RAIL ASM.	1
16	EE-2769-16	CABLE ASM- SOLENOID PLUG	REF
17	H-6417-5	NUT - 5/16-18 HEX	4
18	H-6423-#10	NUT - #10-24 HEX KEP	4
19	H-6463-8	NUT - PUSH-ON SCREW RETAINER	4
20	H-6910-404	SCREW - 1/4-20 X 1/2 BUTTON HEAD CAP	8
21	H-6910-505	SCREW - 5/16-18 X 5/8 BUTTON HEAD CAP	4
22	H-6910-102404	SCREW - #10-24 X 1/2 BUTTON HEAD CAP	4
23	H-7321-5	WASHER - 5/16 SAE PLAIN	4
24	H-7324-8	WASHER - 1/4 INT TOOTH	4
25	H-7324-#10	WASHER - #10 INT TOOTH	3
26	H-7327-10	WASHER - 5/16 MEDIUM LOCK	8
27	P-303	TUBING- 1/4" VINYL - 39"	1
28	S-1350-16	STRAIN RELIEF BUSHING	1
29	S-1694-2	TYRAP - #10	1
30	S-1781-42	LABEL - GROUND	2
31	S-1781-50	LABEL - ELECTRIC SHOCK	1

A-8300-3 Main Assembly- MSCM, S/N's 142608M & Below

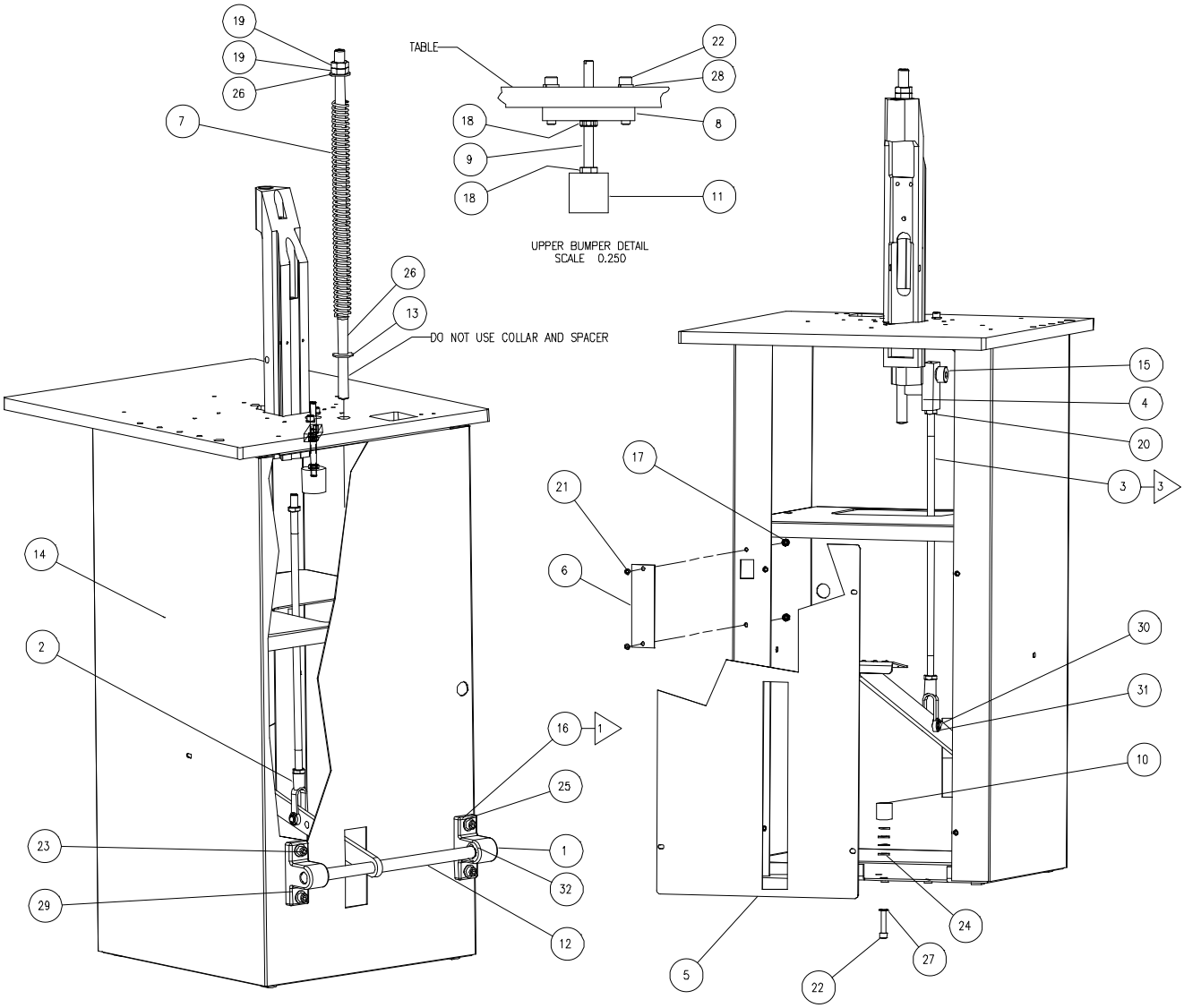

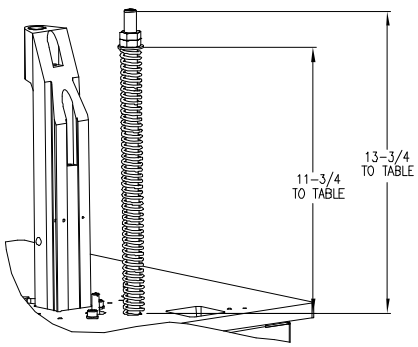

NOTES:

1. NUTS, FLAT WASHERS, LOCK WASHERS ARE INSIDE BASE

2. THIS SHEET CONTAINS PARTS FOUND EXCLUSIVELYIN THE MSCM (MANUAL SCM). FOR PARTS COMMON TO BOTH THE SCM AND MSCM, SEE PREVIOUS SHEETS.

3. PULL–DOWN ROD 16–3/8 DIM. BETWEEN NUTS (INSIDE)

4. PRESSURE FOOT TO BE SET AT 2–1/16" USING 40016–4

A-8300-3 Main Assembly- MSCM Parts List

Item	Part No.	Description	Qty.
1	4668	TREADLE BRACKET	2
2	4669	CLEVIS	1
3	83002	ROD- PULL DOWN	1
4	83003	CLEVIS- MSCM	1
5	83004	FRONT COVER- MANUAL- MSCM	1
6	83009	COVER- SWITCH HOLE	1
7	83016	SPRING- MANUAL OPTION	1
8	83018	STOP ADJUSTMENT BLOCK	1
9	83019	THREADED ROD	1
10	40016-3	MOUNT- VIBRATION	1
11	40016-4	MOUNT- VIBRATION	1
12	A-4672	TREADLE ASSEMBLY	1
13	A-6737	RETURN ROD ASM	1
14	A-4656-6	SCM STAND WELDMENT	1
15	H-5254-1212	SCREW - 3/4 X 1-1/2 SHSS	1
16	H-6417-6	NUT - 3/8-16 HEX	4
17	H-6423-#10	NUT - #10-24 HEX KEP	2
18	H-6424-6	NUT - 3/8-16 HEX JAM	2
19	H-6424-10	NUT - 5/8-11 HEX JAM	2
20	H-6428-7	NUT - 7/16-20 HEX JAM	2
21	H-6910-102403	SCREW - #10-24 X 3/8 BUTTON HEAD CAP	2
22	H-6918-512	SCREW - 5/16-18 X 1-1/2 SOCKET HEAD CAP	3
23	H-6918-612	SCREW - 3/8-16 X 1-1/2 SOCKET HEAD CAP	4
24	H-7321-5	WASHER - 5/16 SAE PLAIN	4
25	H-7321-6	WASHER - 3/8 SAE PLAIN	8
26	H-7321-10	WASHER - 5/8 SAE PLAIN	2
27	H-7324-10	WASHER - 5/16 INT TOOTH	1
28	H-7327-10	WASHER - 5/16 MEDIUM LOCK	2
29	H-7327-12	WASHER - 3/8 MEDIUM LOCK	4
30	S-1482	STRAIGHT PIN- DOUBLE END	1
31	S-1193-43	E-RING - 7/16"	2
32	S-1193-75	E-RING - 3/4"	2

9.1.6 A-8300-3 Main Assembly- MSCM, S/N's 142609M & Up

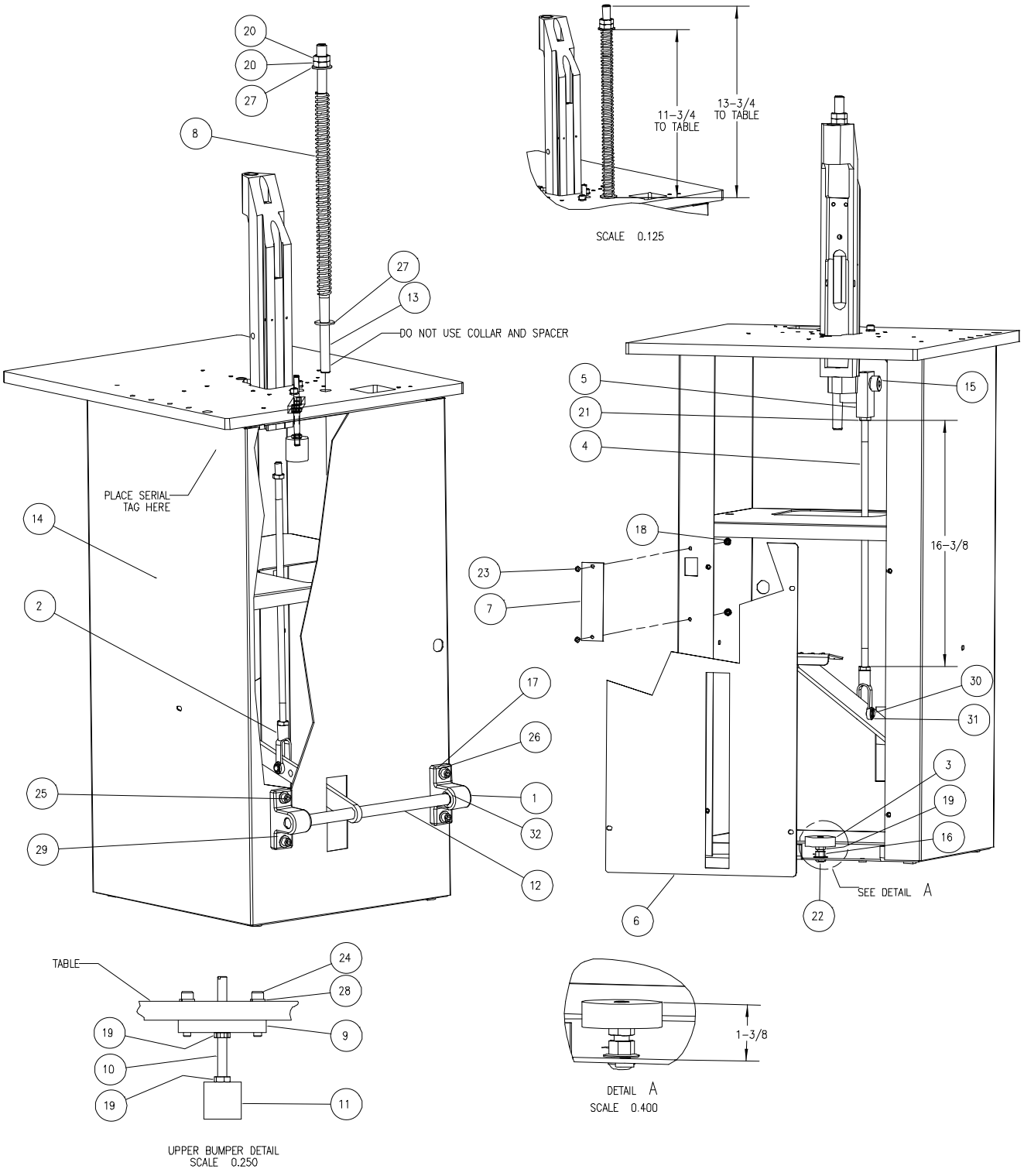

A-8300-3 Main Assembly- MSCM Parts List

Item	Part No.	Description	Qty.
1 1	4668	TREADLE BRACKET	2
2	4669	CLEVIS	1
3	47122	CAP	1
4	83002	ROD- PULL DOWN	1
5	83003	CLEVIS- MSCM	1
6	83004	FRONT COVER- MANUAL- MSCM	1
7	83009	COVER- SWITCH HOLE	1
8	83016	SPRING- MANUAL OPTION	1
9	83018	STOP ADJUSTMENT BLOCK	1
10	83019	THREADED ROD	1
11	40016-4	MOUNT- VIBRATION	1
12	A-4672	TREADLE ASSEMBLY	1
13	A-6737	RETURN ROD ASM	1
14	A-4656-6	SCM STAND WELDMENT	1
15	H-5254-1212	SCREW - 3/4 X 1-1/2 SHSS	1
16	H-6414-6	NUT - 3/8-16 WHIZ LOCK	1
17	H-6417-6	NUT - 3/8-16 HEX	4
18	H-6423-#10	NUT - #10-24 HEX KEP	2
19	H-6424-6	NUT - 3/8-16 HEX JAM	3
20	H-6424-10	NUT - 5/8-11 HEX JAM	2
21	H-6428-7	NUT - 7/16-20 HEX JAM	2
22	H-6910-610	SCREW - 3/8-16 X 1-1/4 BUTTON HEAD CAP	1
23	H-6910-102403	SCREW - #10-24 X 3/8 BUTTON HEAD CAP	2
24	H-6918-512	SCREW - 5/16-18 X 1-1/2 SOCKET HEAD CAP	2
25	H-6918-612	SCREW - 3/8-16 X 1-1/2 SOCKET HEAD CAP	4
26	H-7321-6	WASHER - 3/8 SAE PLAIN	8
27	H-7321-10	WASHER - 5/8 SAE PLAIN	2
28	H-7327-10	WASHER - 5/16 MEDIUM LOCK	2
29	H-7327-12	WASHER - 3/8 MEDIUM LOCK	4
30	S-1482	STRAIGHT PIN- DOUBLE END	1
31	S-1193-43	E-RING - 7/16"	2
32	S-1193-75	E-RING - 3/4"	2

9.1.7 83001-1 Hydraulic Power Unit Assembly- SCM, Rev. A

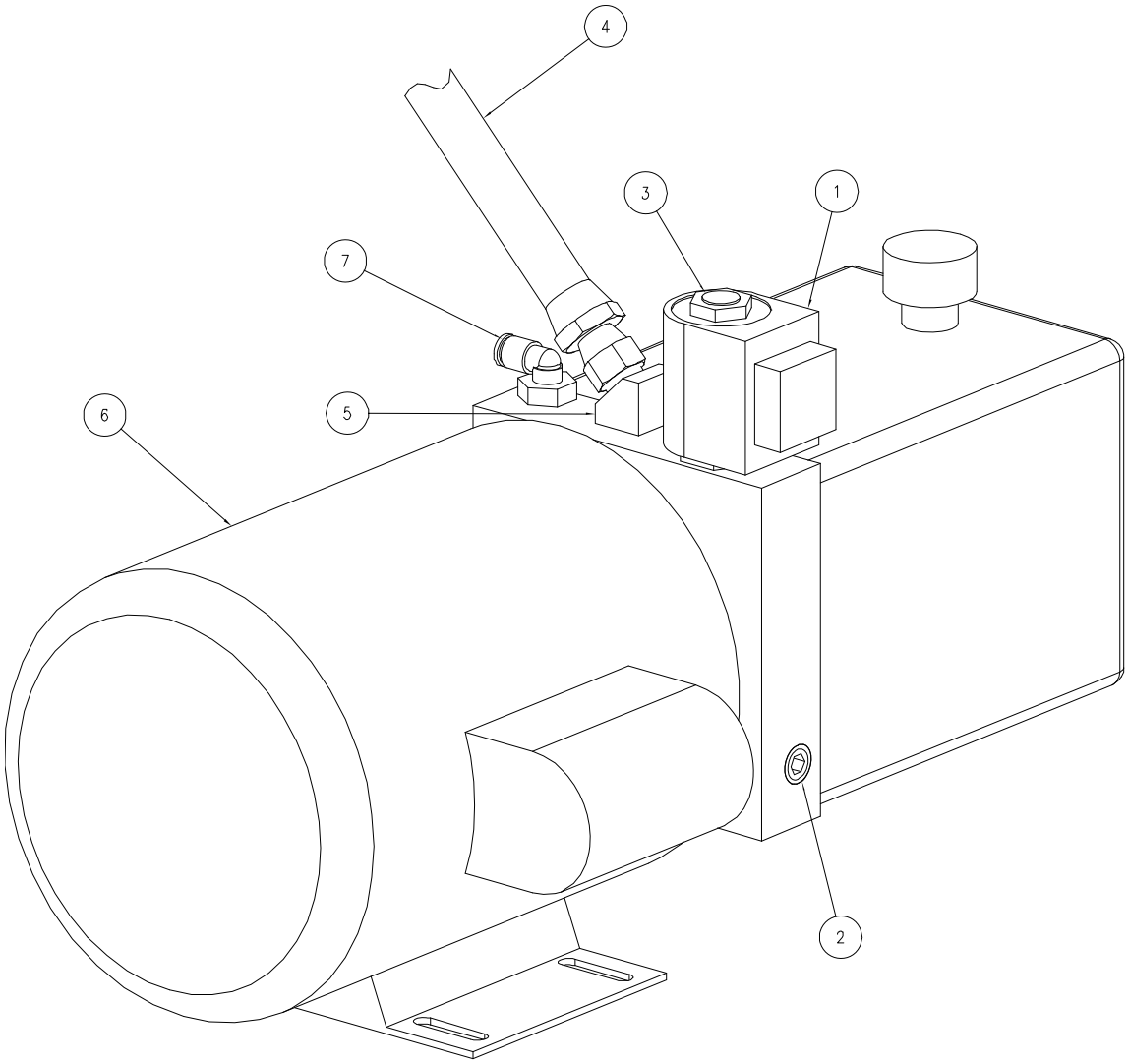

Item	Part No.	Description	Qty.
1	E-1069-19	24 VDC COIL	1
2	H-270	PLUG- NPT	1
3	H-200-5	SOLENOID VALVE	1
4	H-242-10	HOSE ASSEMBLY- HYDRAULIC	1
5	H-254-5	ELBOW- NPT TO TUBE	1
6	H-372-5	HYDRAULIC POWER UNIT	1
7	P-503-403	ELBOW-1/4 TUBE X 3/8 NPT	1
8	H-532	PUMP COUPLING (NOT SHOWN)	REF.

NOTES

9.2 Electrical

9.2.1 E-3356-1 Basic Machine Schematic

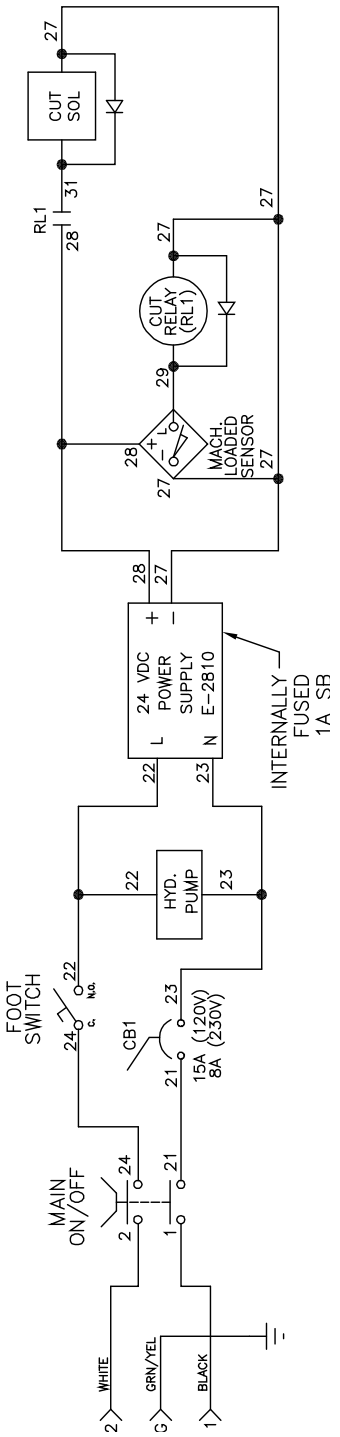

9.2.2 E-3357-1 Interconnection Diagram

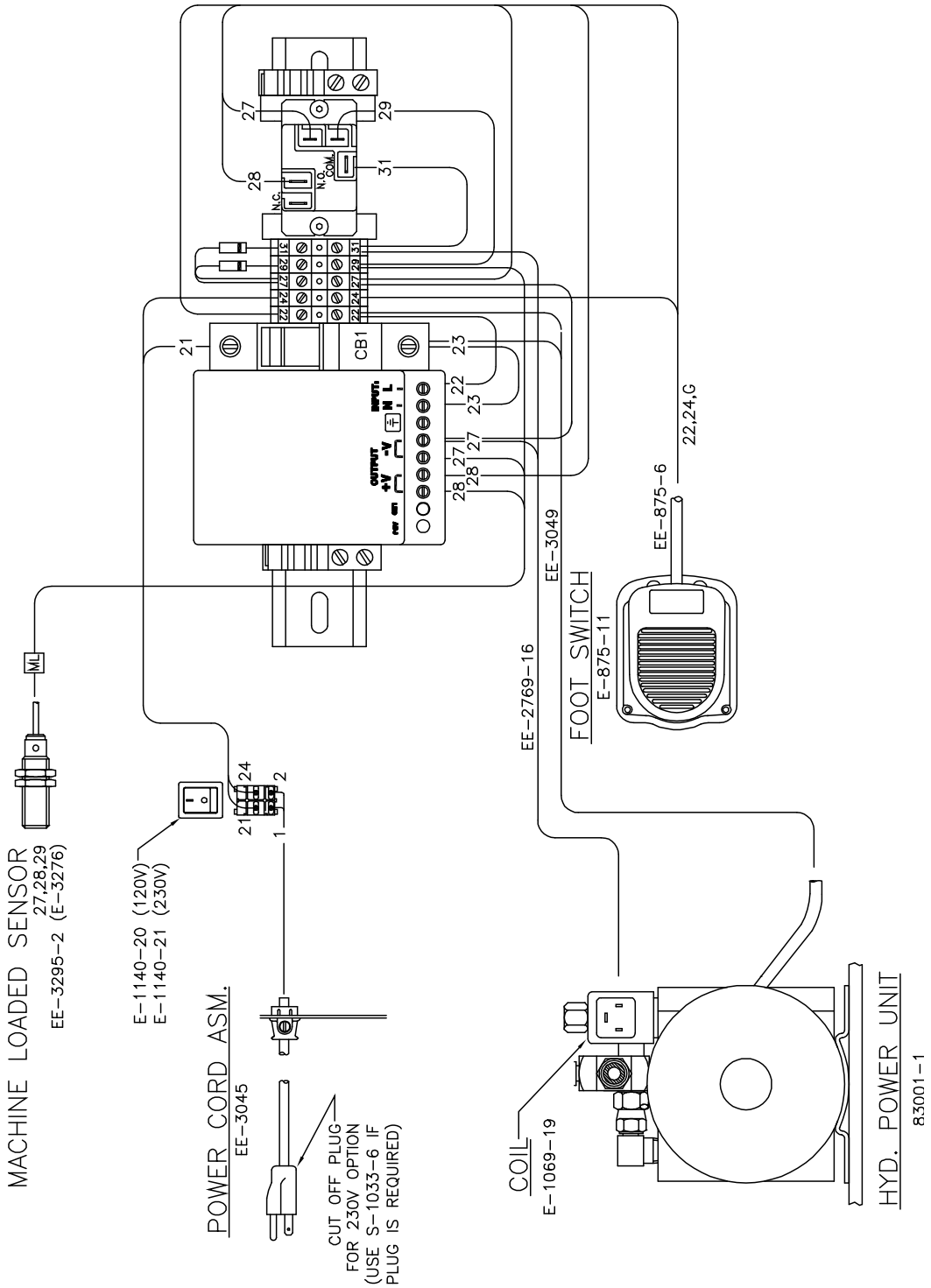

9.2.3 EE-3358-1 Terminal Rail Assembly

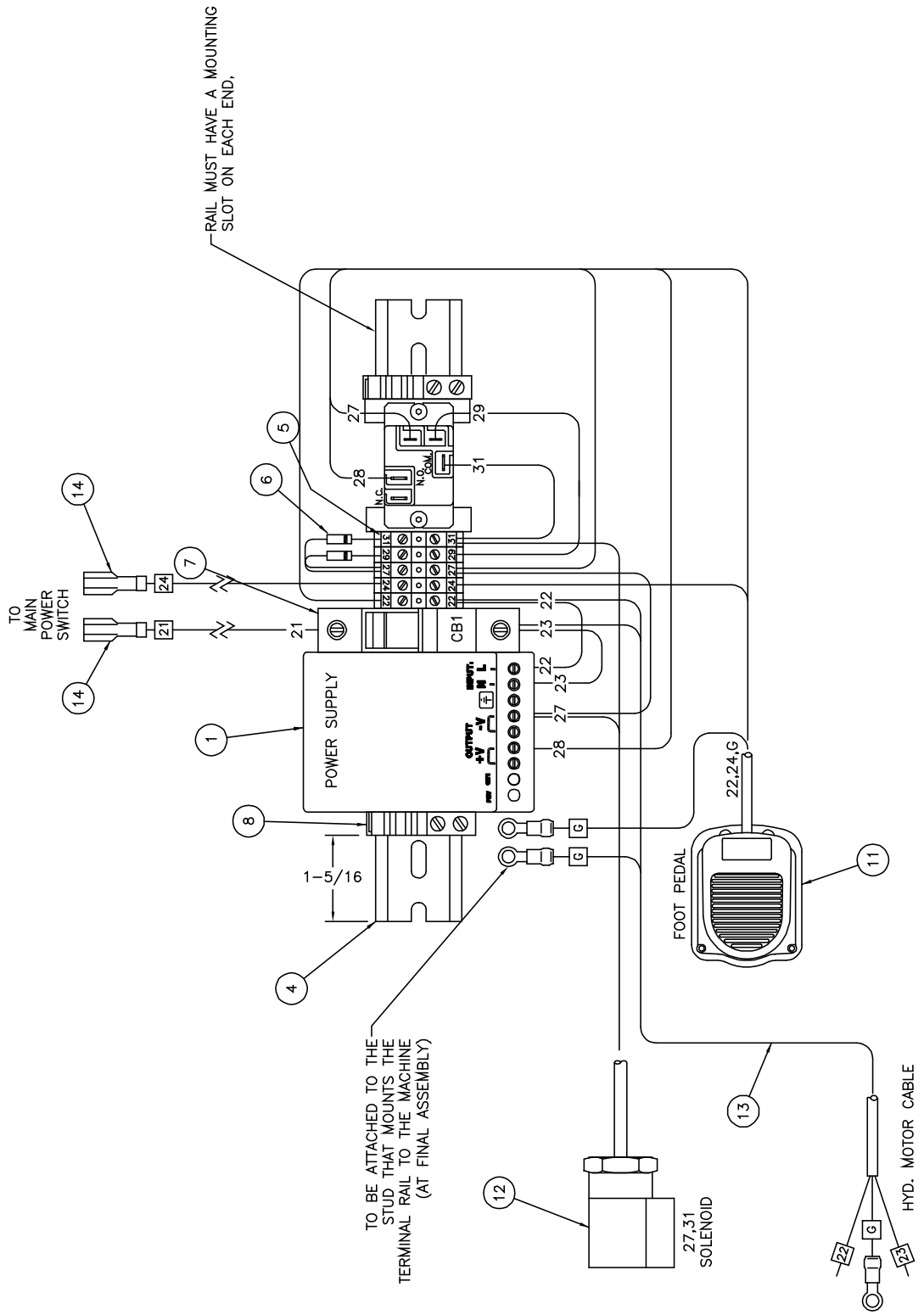

EE-3358-1 Terminal Rail Assembly Parts List

Item	Part No.	Description	Qty.
1	E-2810	POWER SUPPLY - 120/230V PRIM., 24VDC OUT	1
2	E-2232-4	RELAY - 24VDC COIL, (1)N.O./(1) N.C.	1
3	E-3197	KIT - DIN MOUNTS	1
4	E-1977-21	RAIL - 10" LONG	1
5	E-2068-8	TERMINAL BLOCK - RAIL MOUNT, #10AWG	5
6	E-1146-3	DIODE - 1N4005	2
7	E-3264-9	CIRCUIT BREAKER - 8A (230V OPT)	1
7	E-3264-13	CIRCUIT BREAKER - 15A (120V OPT)	1
8	E-2070	END BRACKET - TERMINAL RAIL	2
9	E-709-R	WIRE - #18 GA. RED MTW (38" TOTAL)	1
10	E-849-R	WIRE - #16 GA. RED MTW (43" TOTAL)	1
11	EE-875-6	SWITCH ASSEMBLY - FOOT	1
12	EE-2769-16	CABLE ASSEMBLY - SOLENOID, CUT	1
13	EE-3049	CABLE ASSEMBLY - HYDRAULIC MOTOR	1
14	E-1214-49	CONNECTOR - 1/4" FULLY INS. Q.D.	2
15	E-1214-42	CONNECTOR - 3/16" FULLY INS. Q.D.	3
16	H-6910-63202	SCREW - #6-32 X ¼” BUT HD CAP	2
17	E-1214-19	CONNECTOR – ¼” INS. Q.D.	1

10.0 Appendix C- Troubleshooting

The following list of potential problems and suggests possible causes.

Problem	Possible Cause
The machine will not cycle	Power cord is disconnected. Tripped circuit breaker Disconnected wires
Knife down motion is sluggish or erratic	Low hydraulic fluid level Hydraulic leak Insufficient voltage to machine Dovetail requires lubrication Dovetail gib improperly adjusted
The machine will not switch on	Power cord disconnected Tripped circuit breaker Defective power switch Loose wire connection.
Knife return is sluggish or erratic	Knife return spring(s) worn out or improperly adjusted Dovetail requires lubrication Dovetail gib improperly adjusted
Cannot adjust knife to die	Improperly matched knife and die Knife not aligned in keyway
Poor corners	Stock improperly jogged Side or back gauges improperly adjusted Knife/die improperly adjusted Dull knife

NOTES

F.329-E
May 2019